NAND AND NOR ROM

REVISION

- Nor implementations

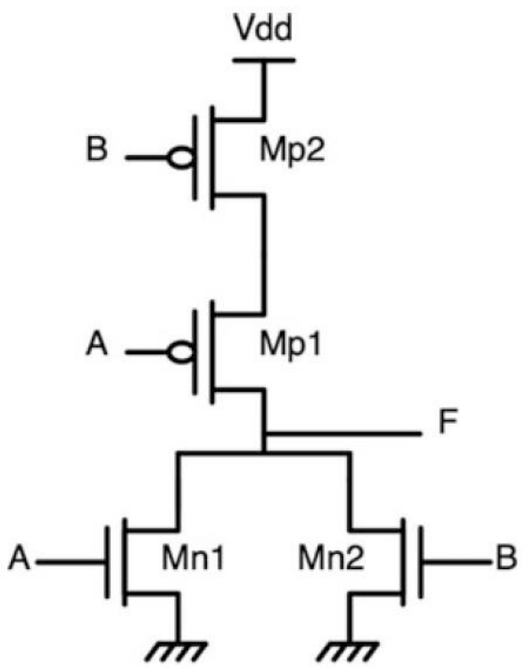

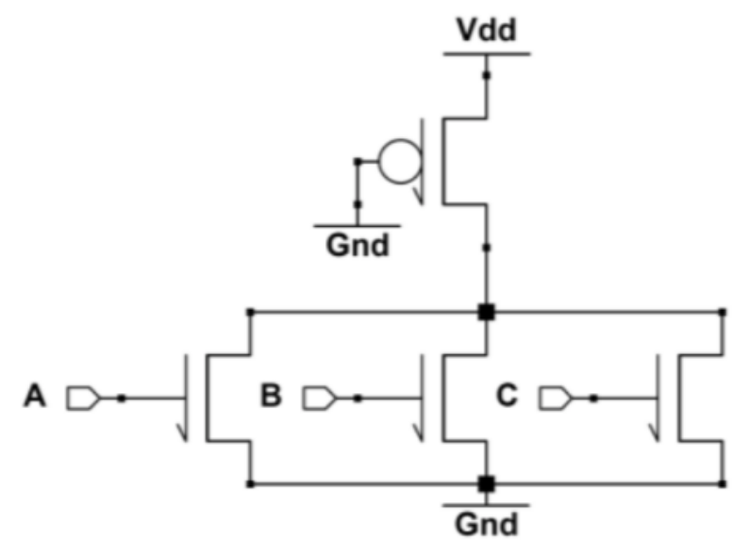

CMOS

Large number of transistor ☹

No static current ☺

Pseudo NMOS

Smaller number of transistor ☺

Static current exists ☹

REVISION

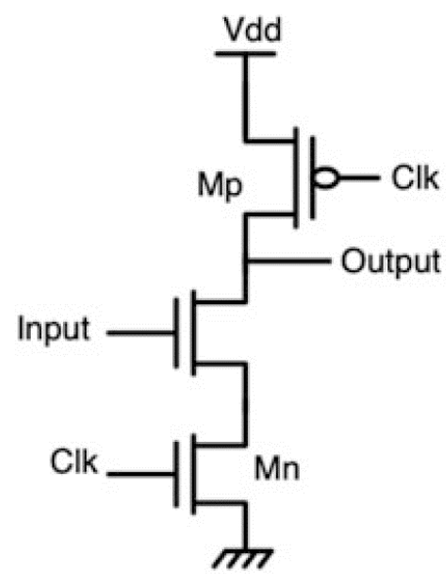

Dynamic CMOS

Requires precharge phase ☹

No static current ☺

PSEUDO NMOS NOR ROM ARRAY

- A cell is an intersection of a row and a column
- Each bit line is a pseudo NMOS NOR gate with a maximum number of inputs equal to the number of rows

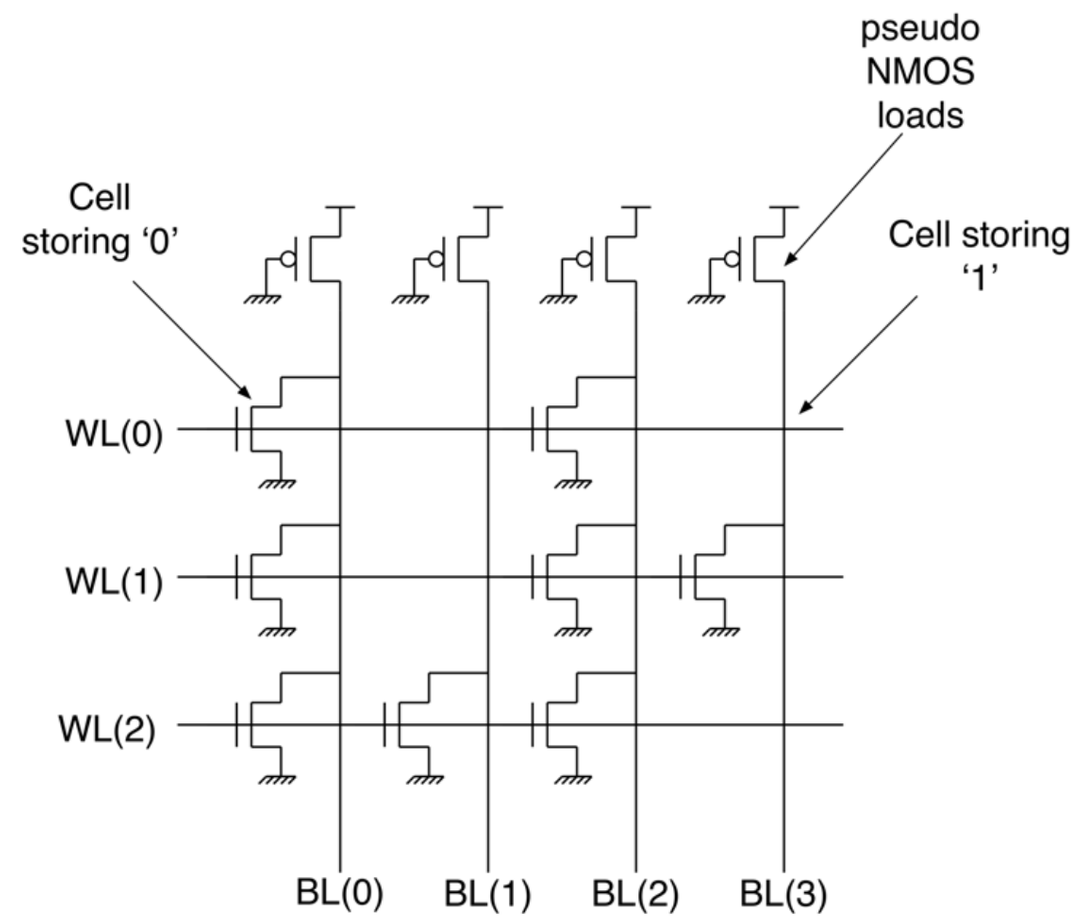

TYPICAL QUESTIONS IN ALL MEMORIES

- How can we read from the memory?
- How can we write (if applicable)?
- Delay calculations in reading, and writing?

READING A ‘1’ FROM NOR ROM

- Read from cell 0, 3
- Enable row 0 by raising WL(0)=‘1’ and all other WL=‘0’
- The entire row is enabled
- We read on every BL, but observe only BL(3)
- Because no transistor exists in the cell read Vdd on BL(3)

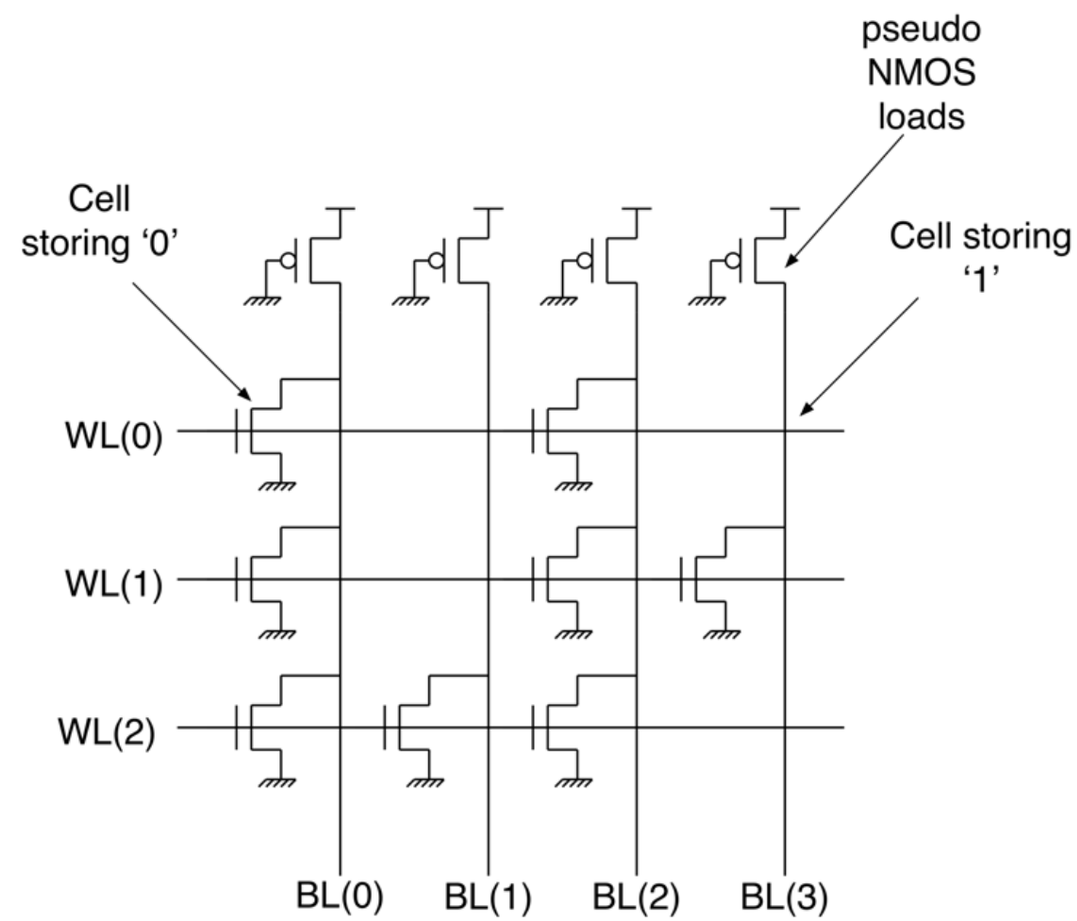

- Equivalent circuits while reading

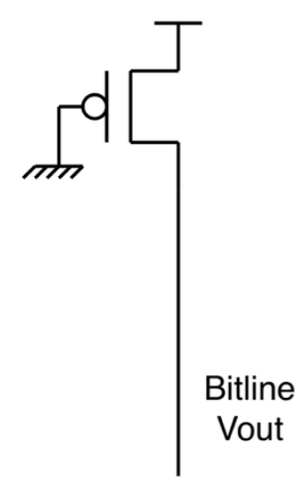

READING A ‘0’ FROM NOR ROM

- Read from cell 0, 0
- Enable row 0 by raising WL(0)=‘1’ and all other WL=‘0’
- The entire row is enabled
- We read on every BL, but observe only BL(0)

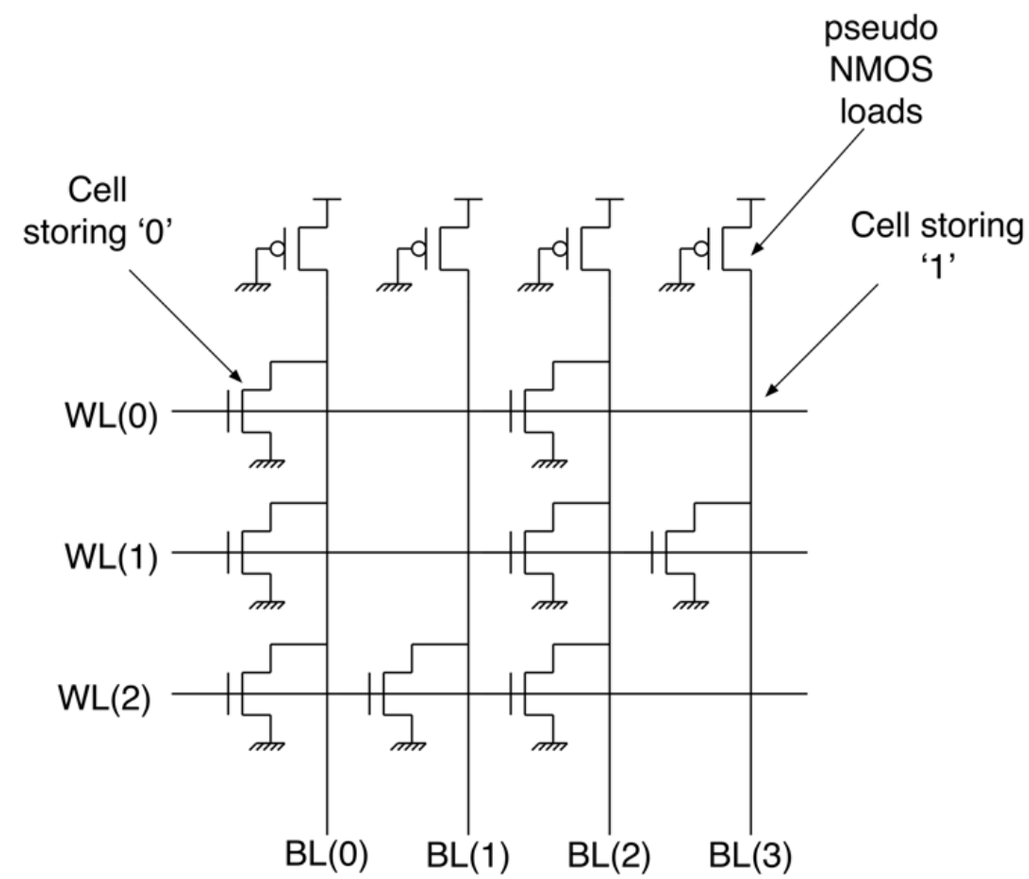

- Equivalent circuits while reading

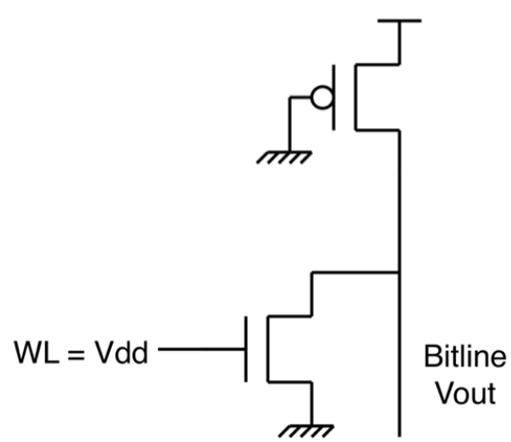

$$I_{pmos}\Big|_{sat} = I_{nmos}\Big|_{ohmic}$$

STORAGE MECHANISMS

- This is a summary of storing “1” and “0”

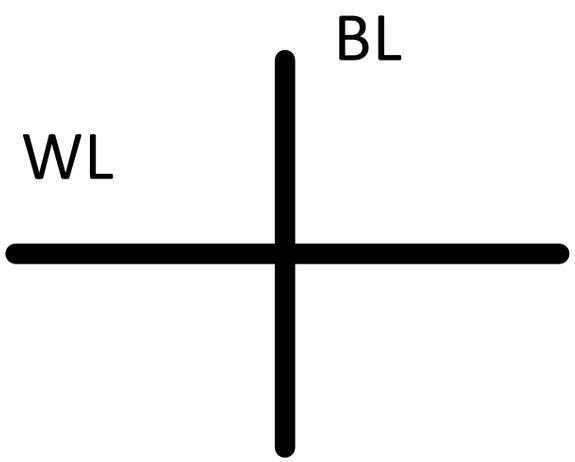

Storing “1”

No transistor

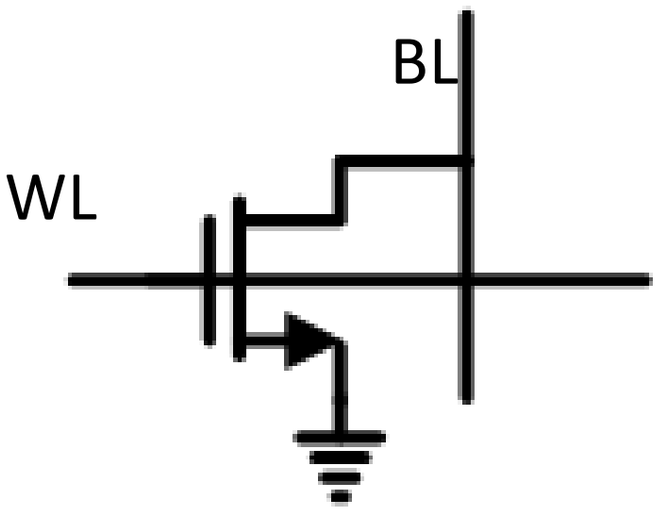

Storing “0”

Add transistor

AVOIDING STATIC CURRENT

- Cannot use static CMOS NOR gates
  - Why not?
- Dynamic loads
  - Need a pre charge phase now

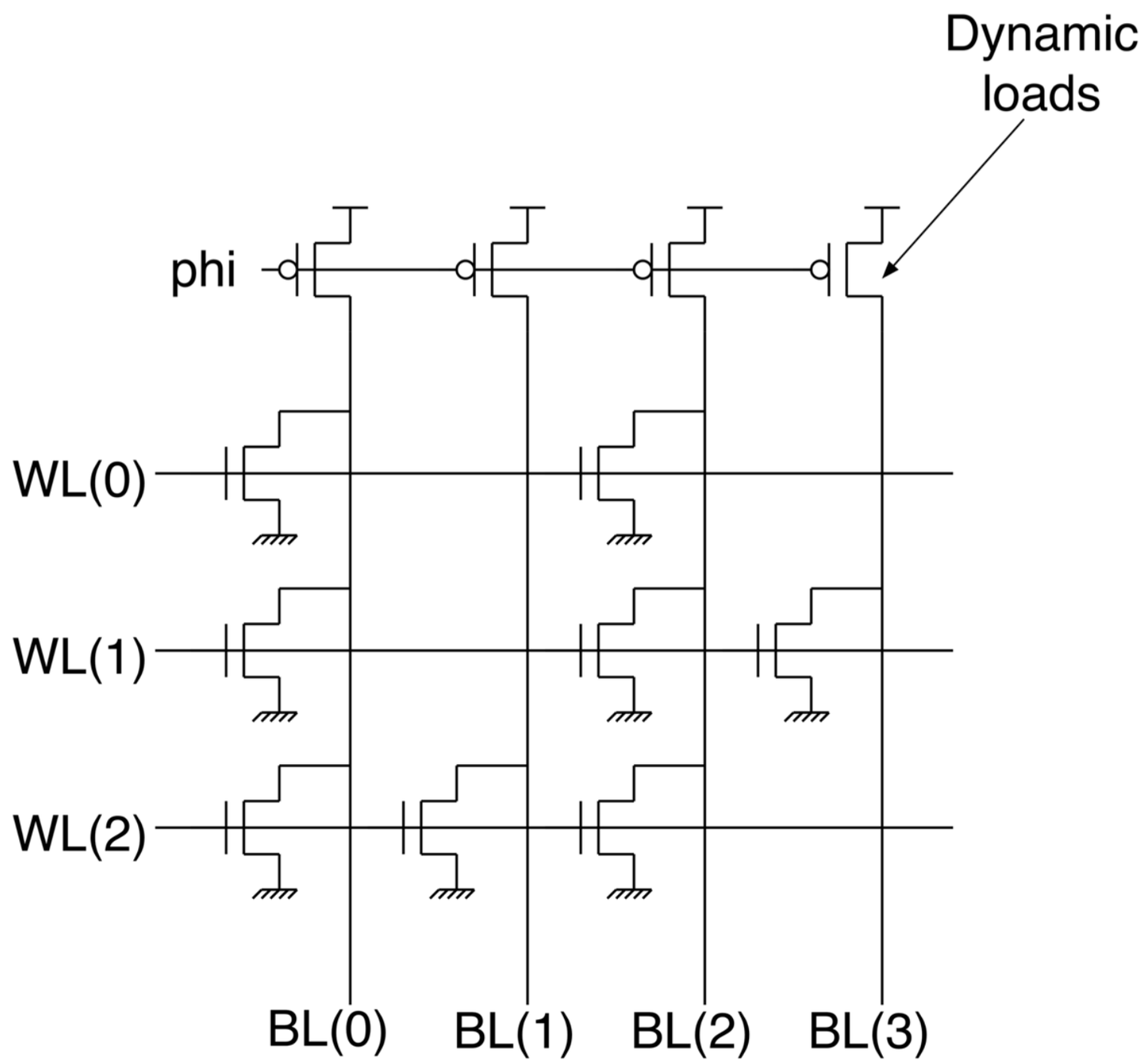

TIMELINE FOR READING

- Lower phi to pre charge the bit line
- When the BL is fully percharged, raise WL
- WL enables the appropriate cell
- The cell (if it contains a transistor) will discharge the bit line

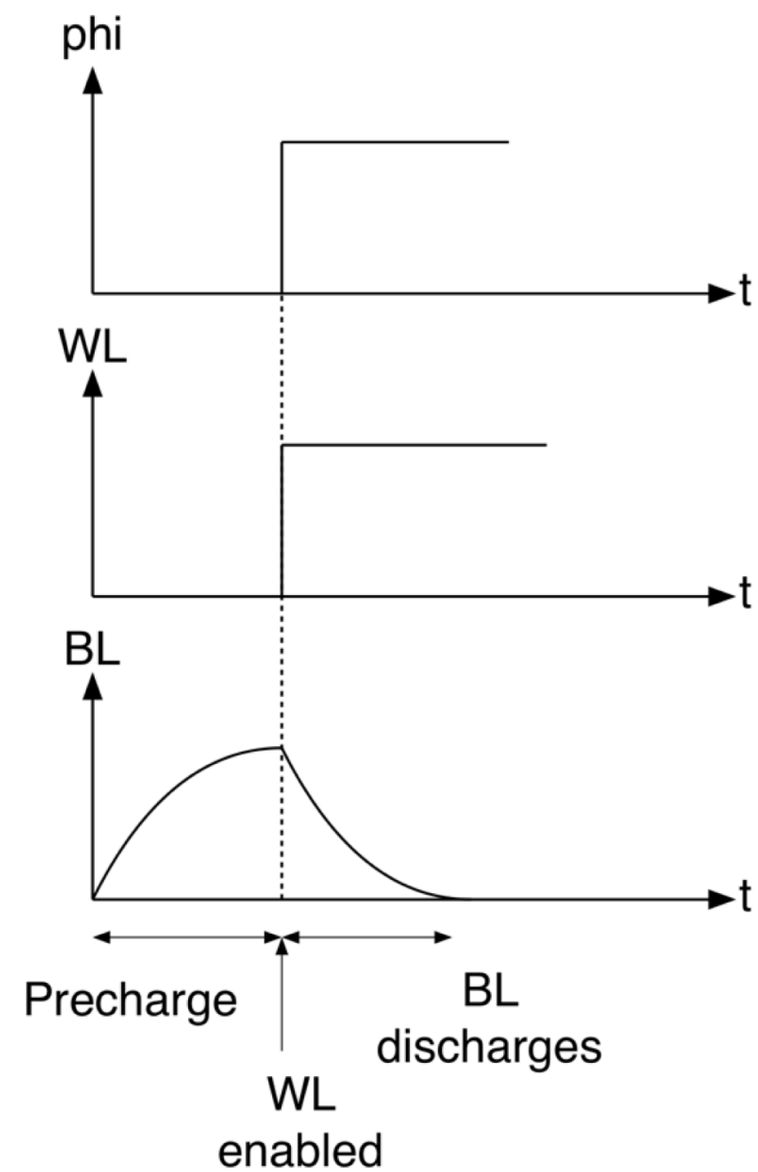

LAYOUT OF NOR ROM

- Word lines run horizontally in poly
  - Long lines should be metal
  - To avoid overhead of contacts use poly

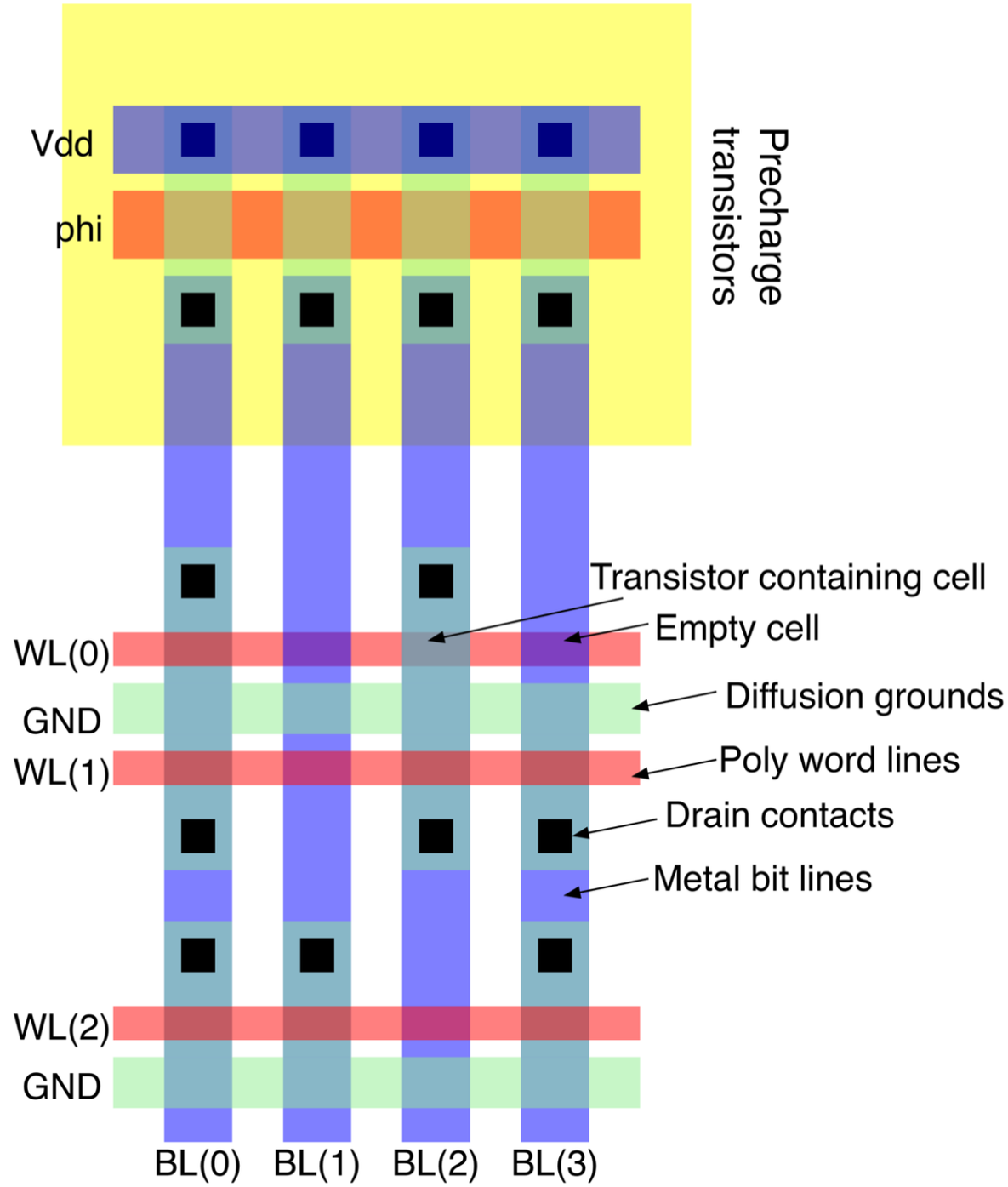

LAYOUT OF NOR ROM

- Bit lines are metal
  - The bit line will need to contact diffusions
  - But diffusions are wide to begin with
  - Overhead of contacts not big
  - Cannot run a long diffusion line

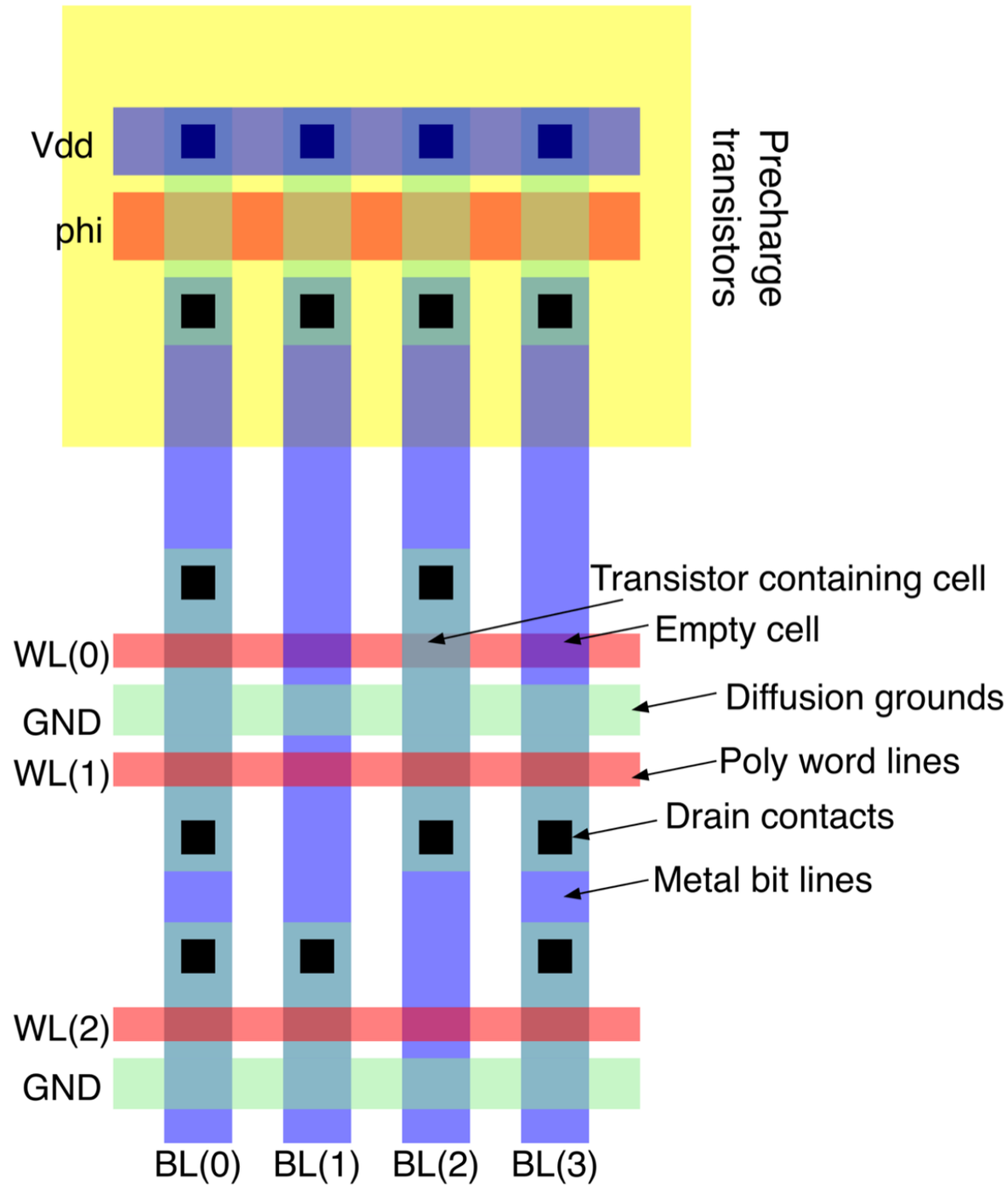

LAYOUT OF NOR ROM

- But we are running multiple diffusion lines horizontally
- These are grounds
- Need many grounds because this is NOR
- OK to keep it in diffusion but must be careful about ground bounce

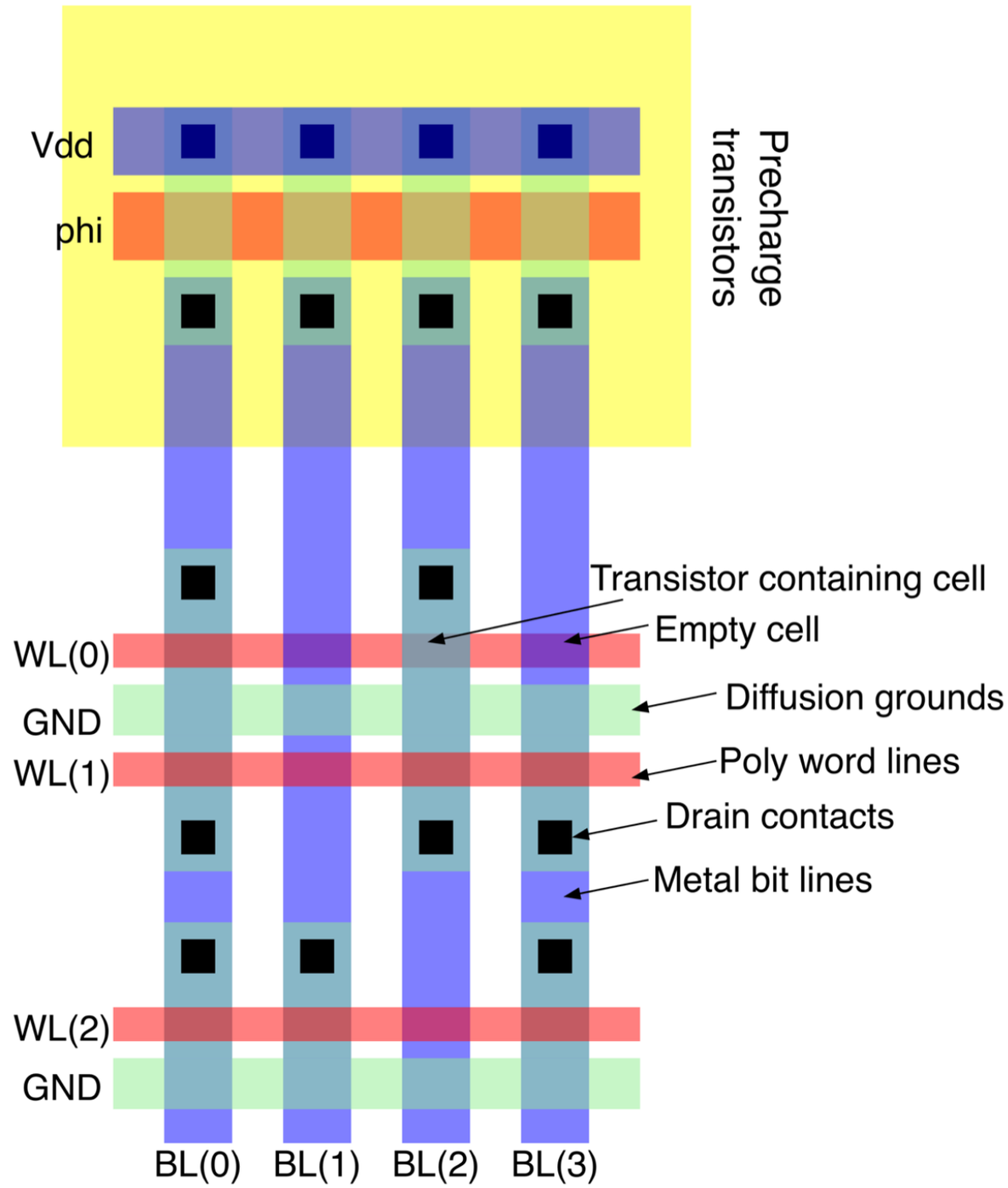

LAYOUT OF NOR ROM

- Row of PMOS transistors in well on top
- Word lines **always** poly
- Bit line **always** metal

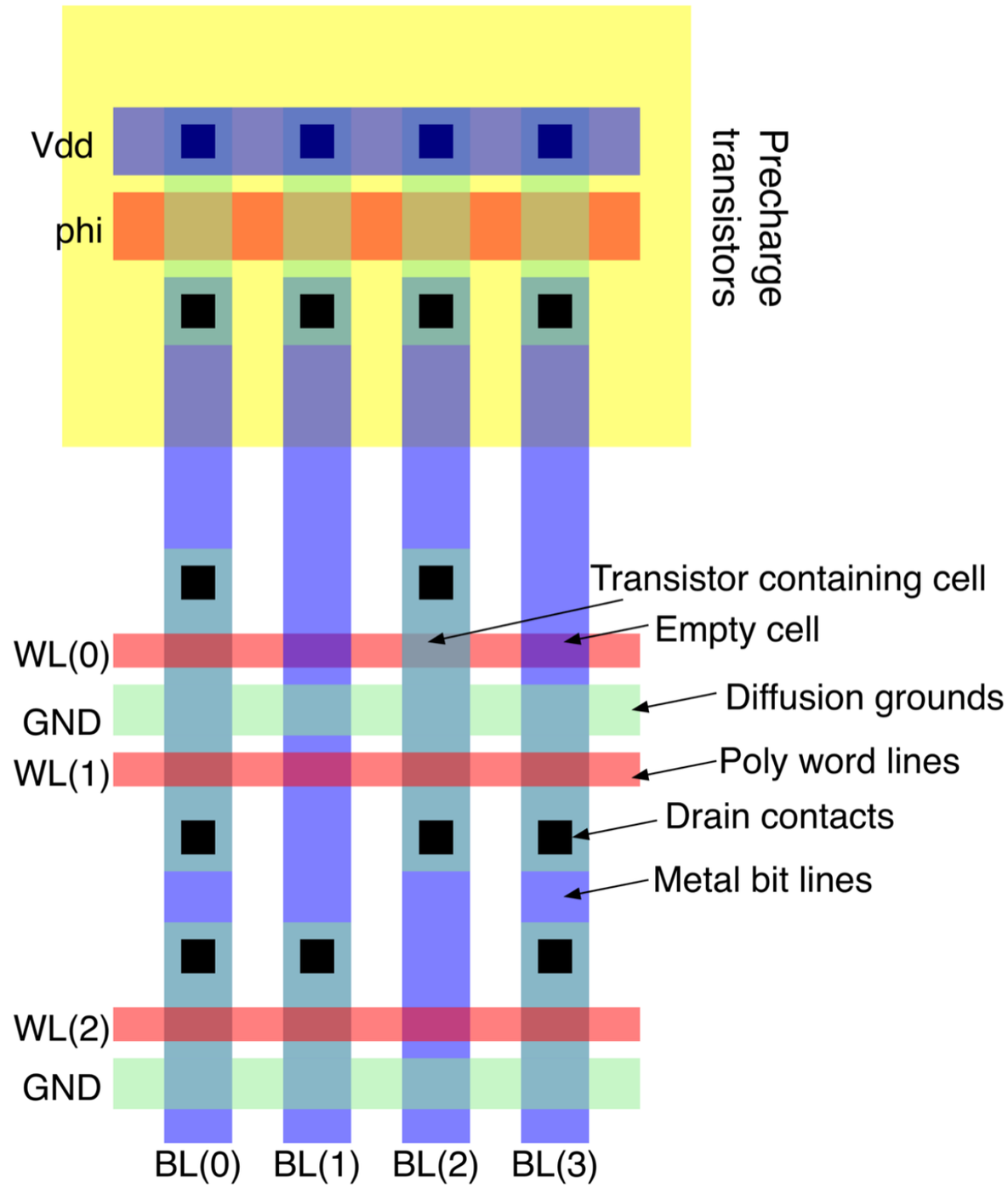

NAND: SIMILARITIES TO NOR ARRAY

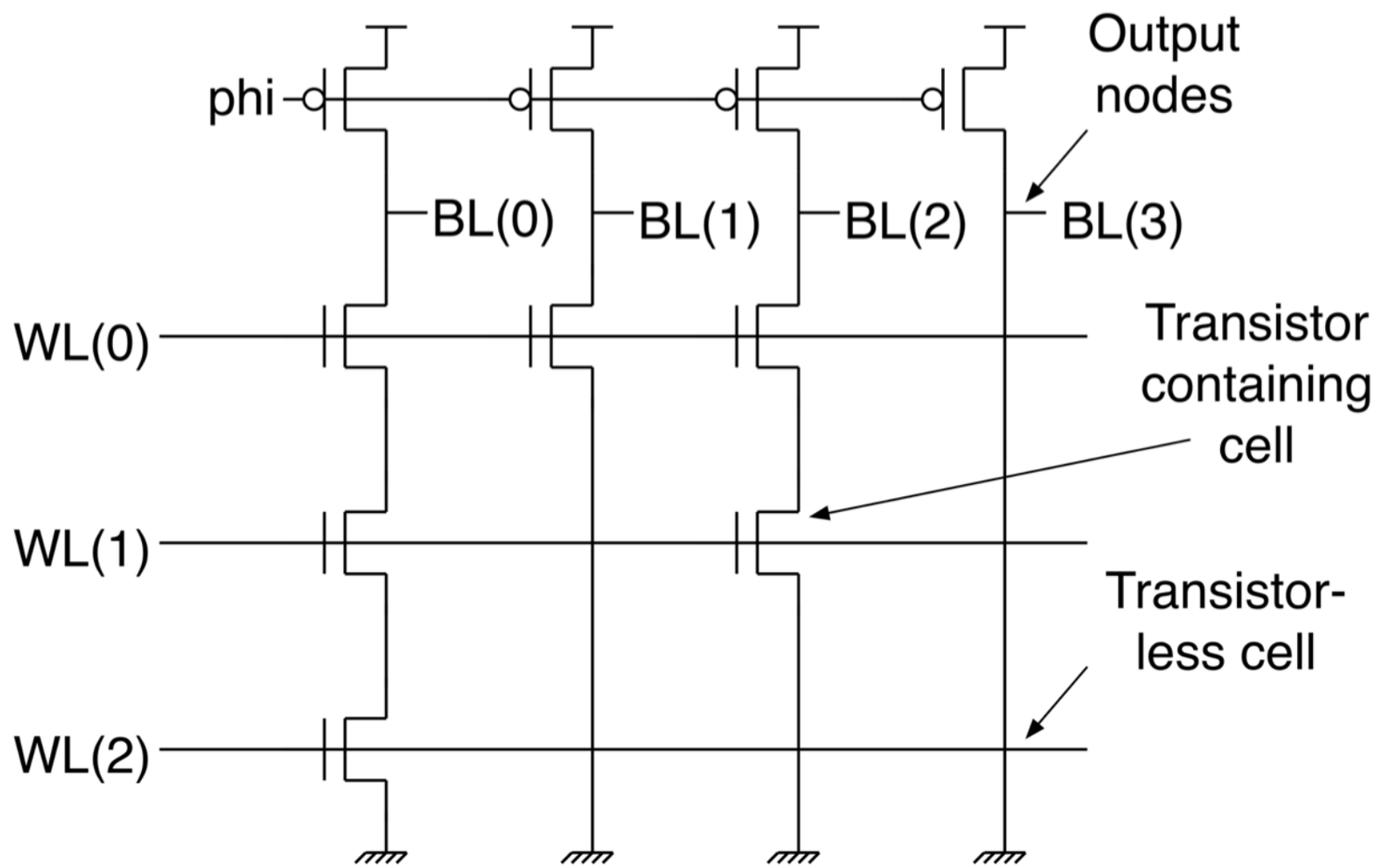

- Same architecture, but every BL is now a NAND gate
- Can also design with pseudo-NMOS loads

ROW DECODING

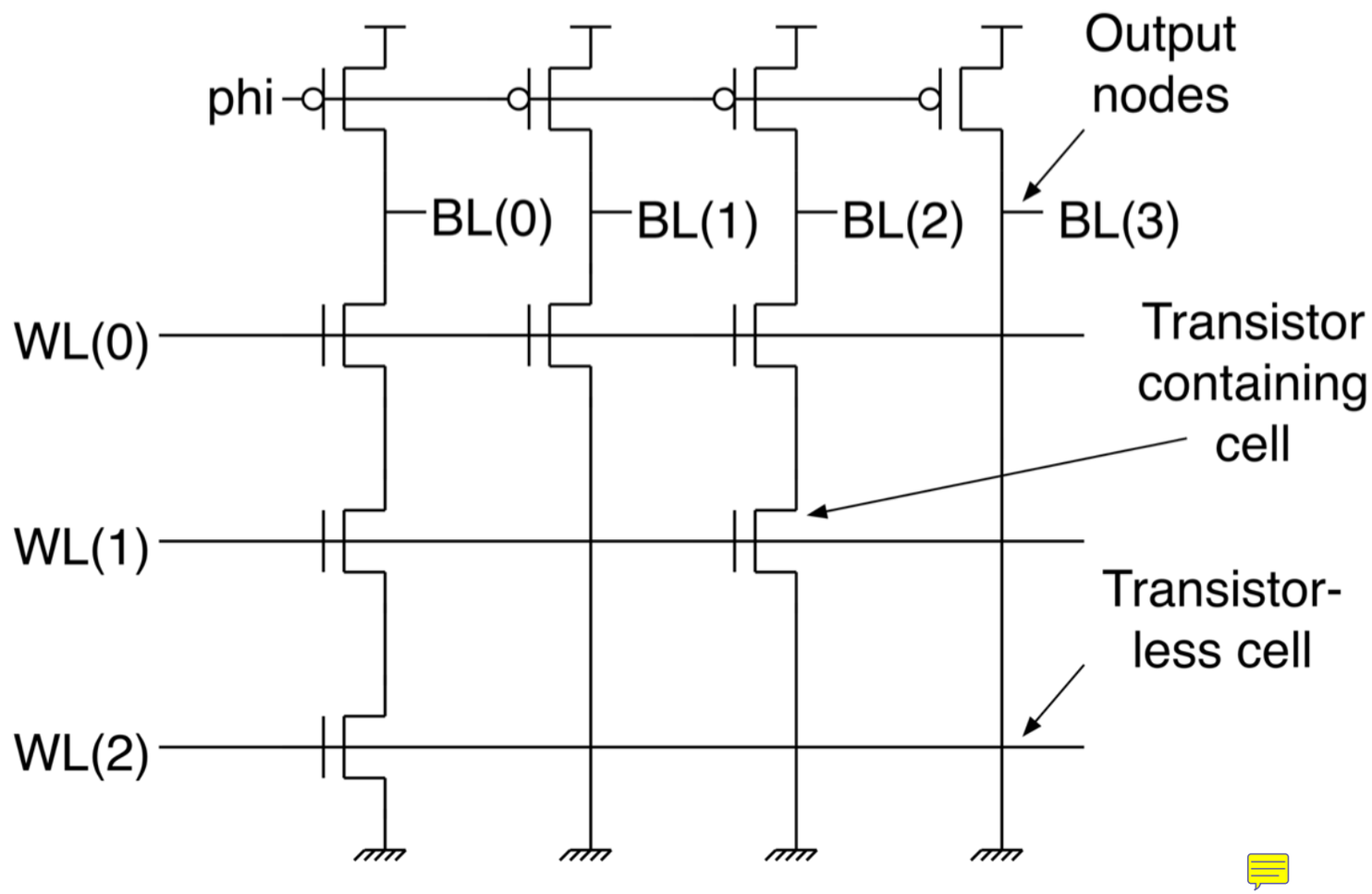

- Row decoder is active low
  - Only active row is ‘0’, all other rows ‘1’

TIMELINE FOR READING FROM NAND ROM

- Pre charge BL
- When pre charge is complete lower target WL only
- Cell activated if a transistor does not exist there
- Bit line discharges down to zero

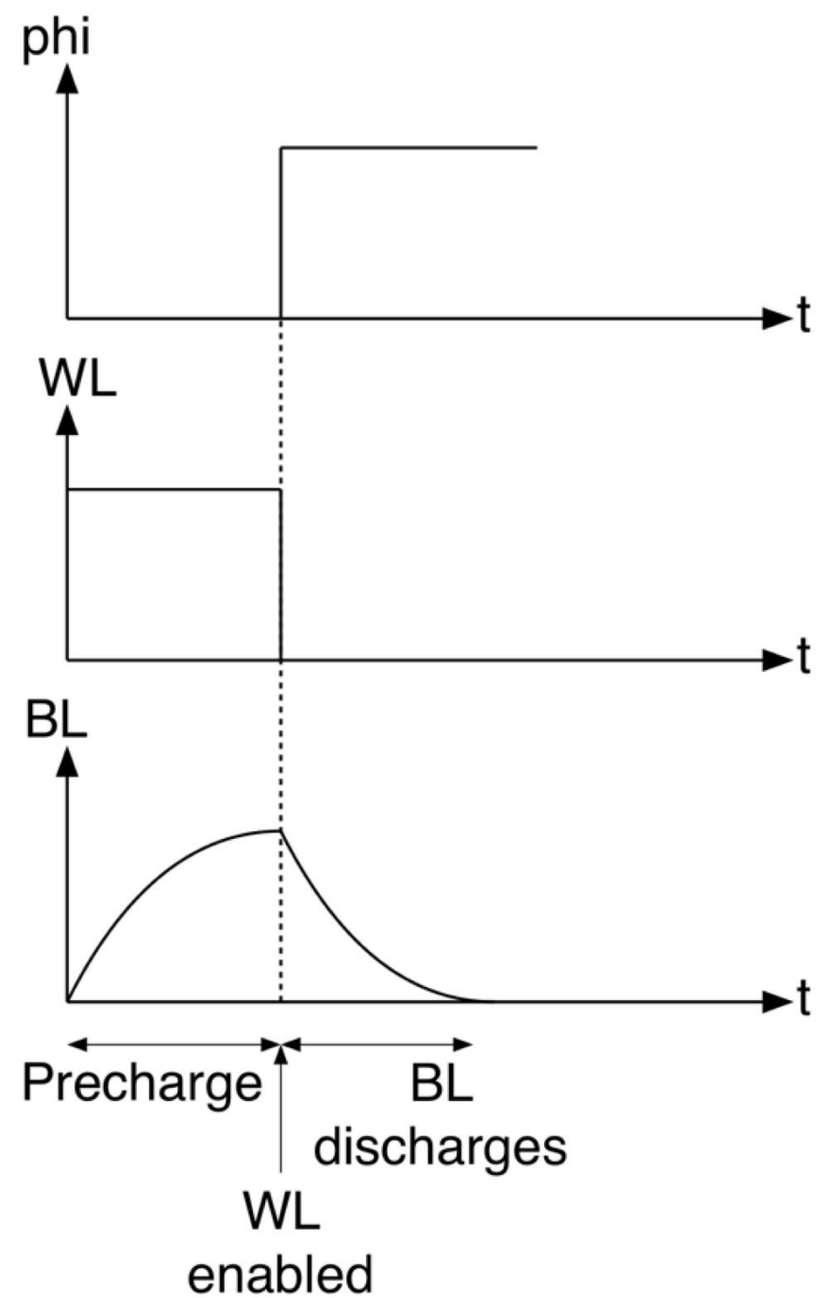

READING ‘1’

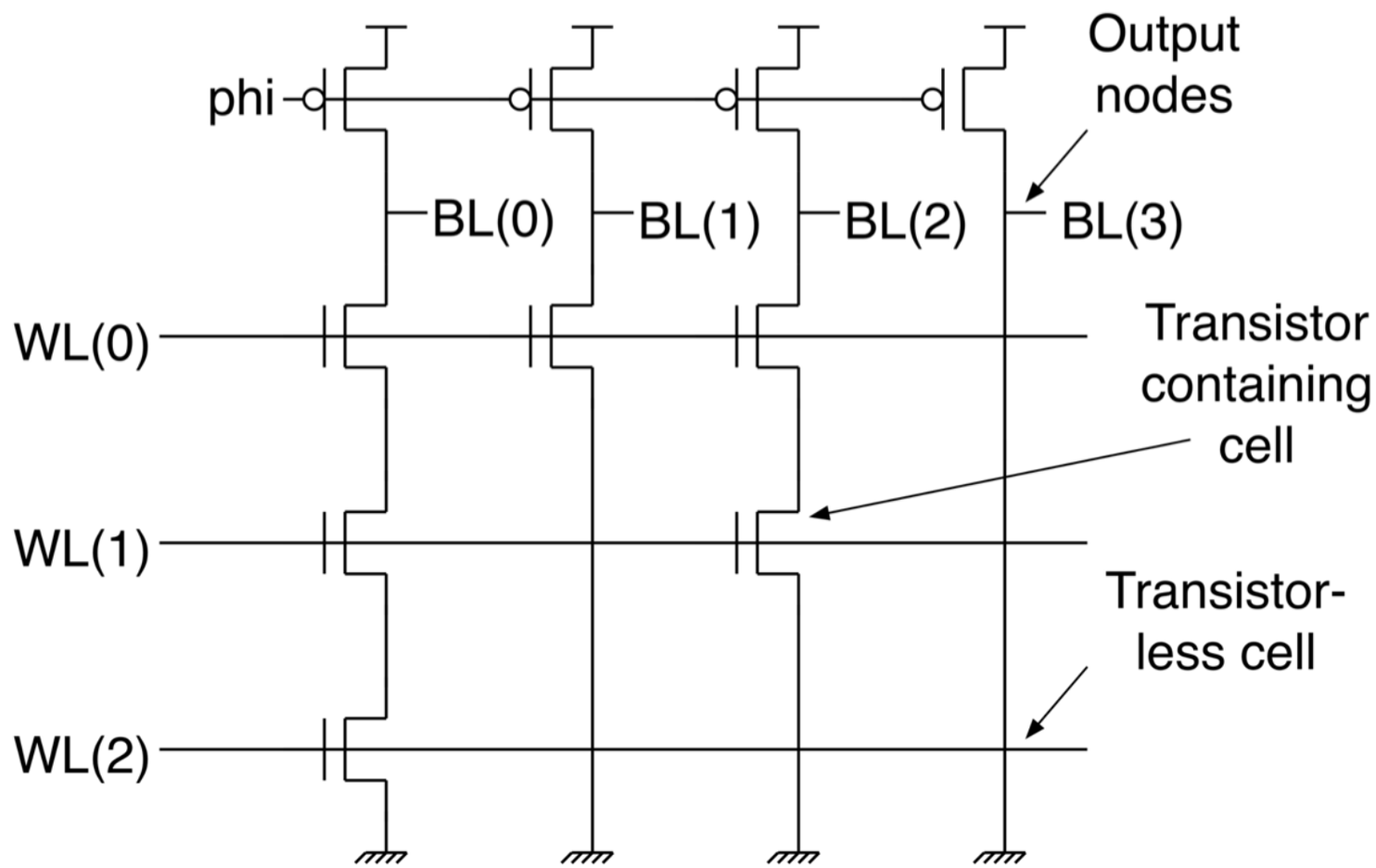

- WL(1)=‘0’, all others ‘1’. Transistor interrupts BL(2)
- Read Vdd at BL(2)

READING ‘0’

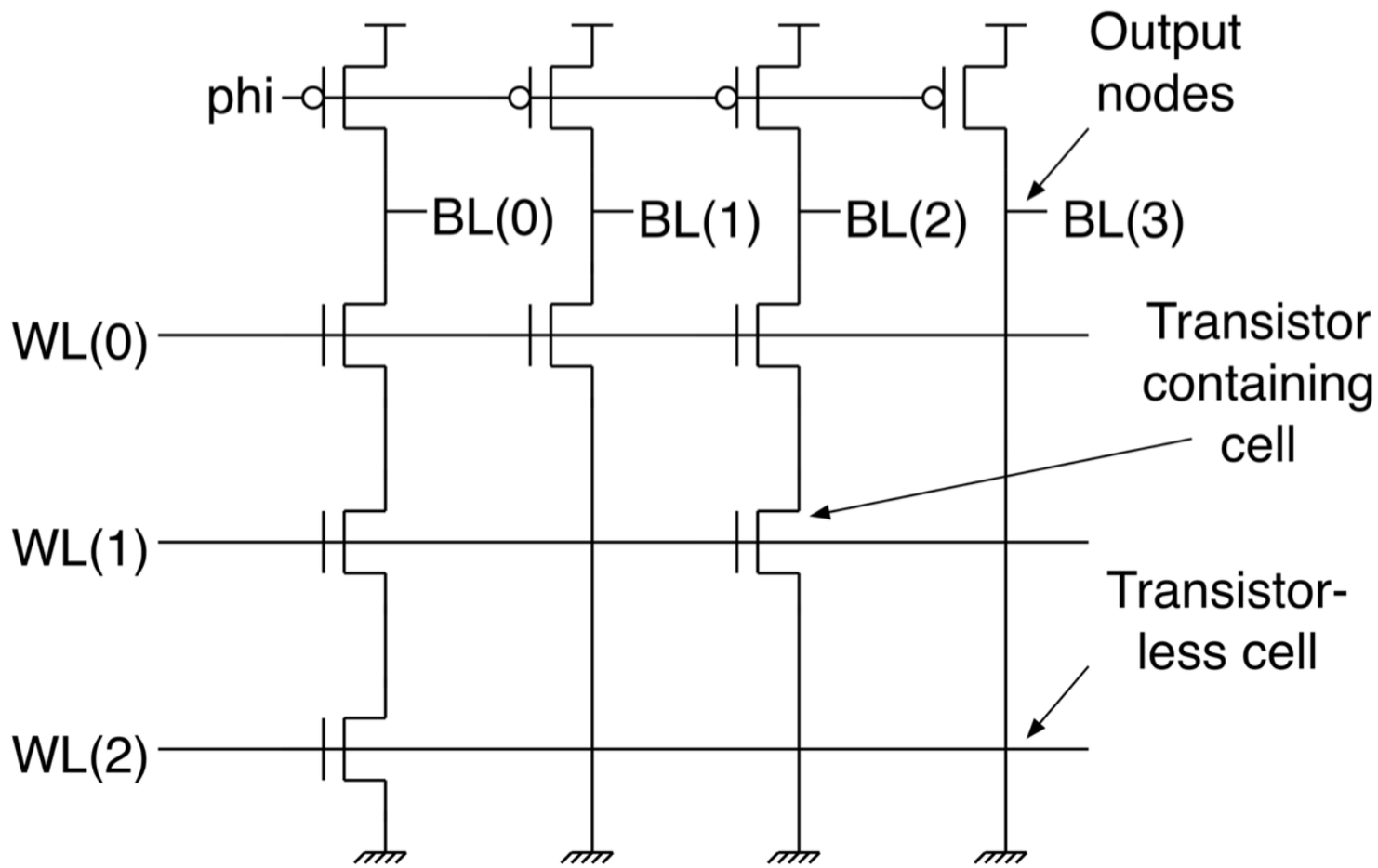

- WL(2)=‘0’, all others ‘1’. BL(3) uninterrupted to ground
- Read 0V at BL(3)

LAYOUT OF NAND ROM
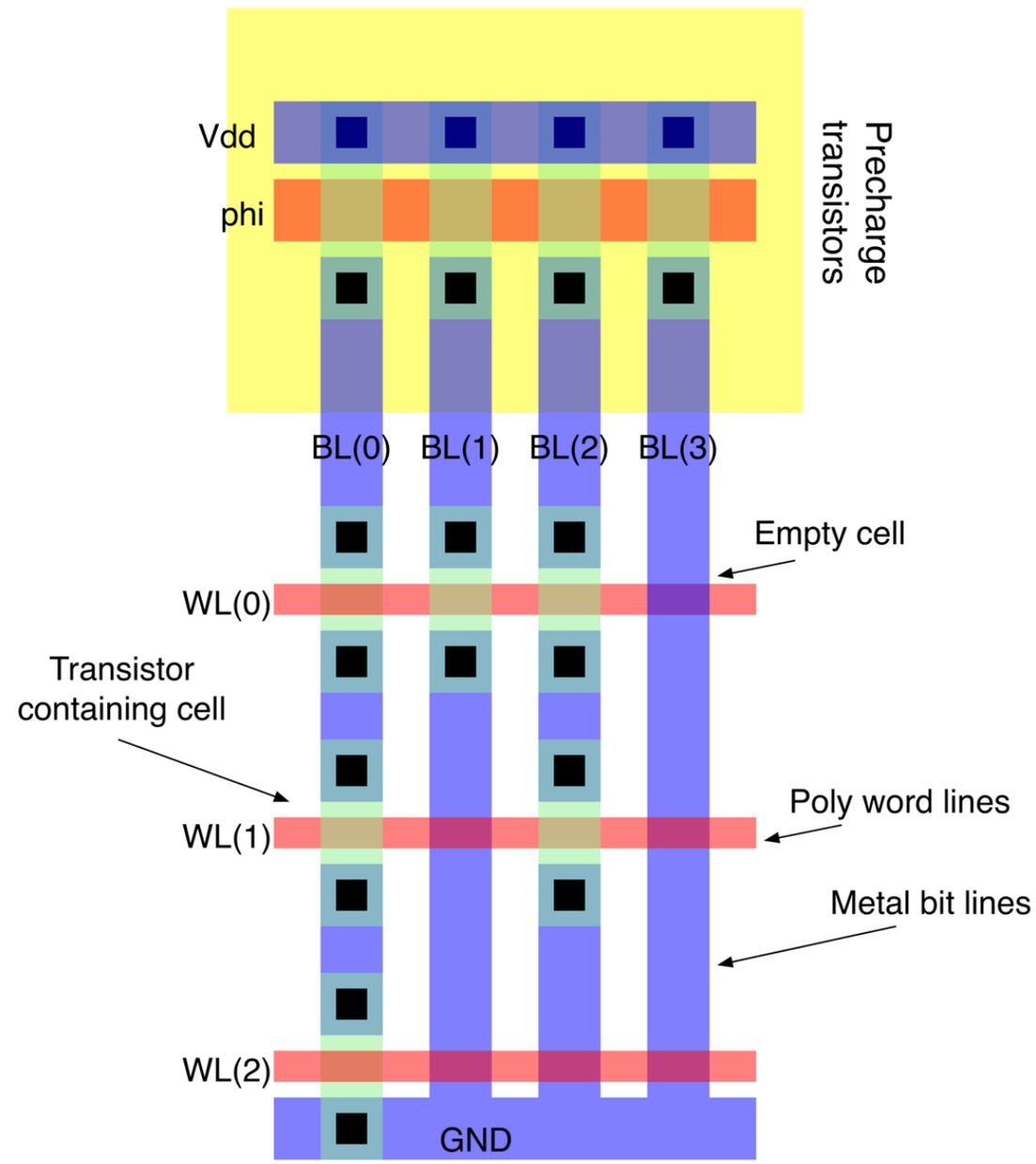
- Poly WL, Metal BL
- Single metallic ground at bottom
- Extremely dense array
  - Best density among all memories
- Long resistive chains can increase resistance